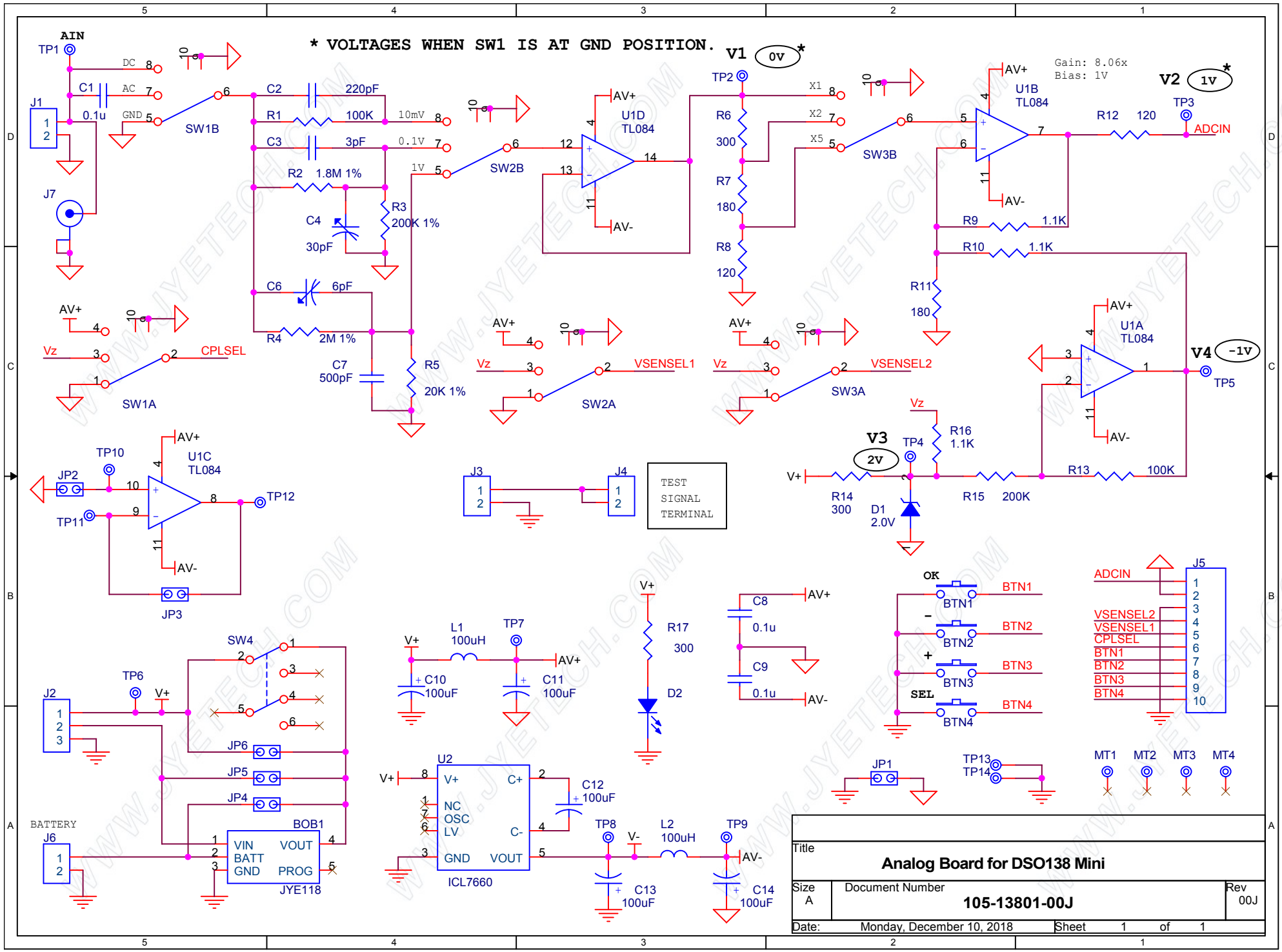
* VOLTAGES WHEN SW1 IS AT GND POSITION.
AIN
TP1
DC
AC
GND
C1
0.1u
J1
J7
SW1B
C2
220pF
R1
100K
10mV
C3
3pF
0.1V
R2
1.8M 1%
1V
C4
30pF
R3
200K 1%
C6
6pF
R4
2M 1%
C7
500pF
R5
20K 1%
SW2B
U1D
TL084
AV+
AV-
V1
0V
TP2
R6
300
R7
180
R8
120
X1
X2
X5
SW3B
U1B
TL084
Gain: 8.06x
Bias: 1V
V2
1V
TP3
ADCIN
R12
120
R9
1.1K
R10
1.1K
R11
180
U1A
TL084
V4
-1V
TP5
Vz
CPLSEL
SW1A
VSENSEL1
SW2A
VSENSEL2
SW3A
U1C
TL084
TP10
JP2
TP11
TP12
JP3
J3
J4
TEST
SIGNAL
TERMINAL
V3
2V
TP4
R16
1.1K
R14
300
D1
2.0V
R15
200K
R13
100K
SW4
TP6
J2
JP6
JP5
JP4
BATTERY
J6
BOB1
VIN
BATT
GND
VOUT
PROG
JYE118
L1
100uH
TP7
C10
100uF
C11
100uF
R17
300
D2
C8
0.1u
C9
0.1u
OK
BTN1
BTN2
BTN3
SEL
BTN4
J5
ADCIN
VSENSEL2
VSENSEL1
CPLSEL
BTN1
BTN2
BTN3
BTN4
U2
V+
NC
OSC
LV
GND
C+
C-
VOUT
ICL7660
C12
100uF
TP8
L2
100uH
TP9
C13
100uF
C14
100uF
JP1
TP13
TP14
MT1
MT2
MT3
MT4
Title
Analog Board for DSO138 Mini
Size
A
Document Number
105-13801-00J
Rev
00J
Date:
Monday, December 10, 2018
Sheet
1
of
1