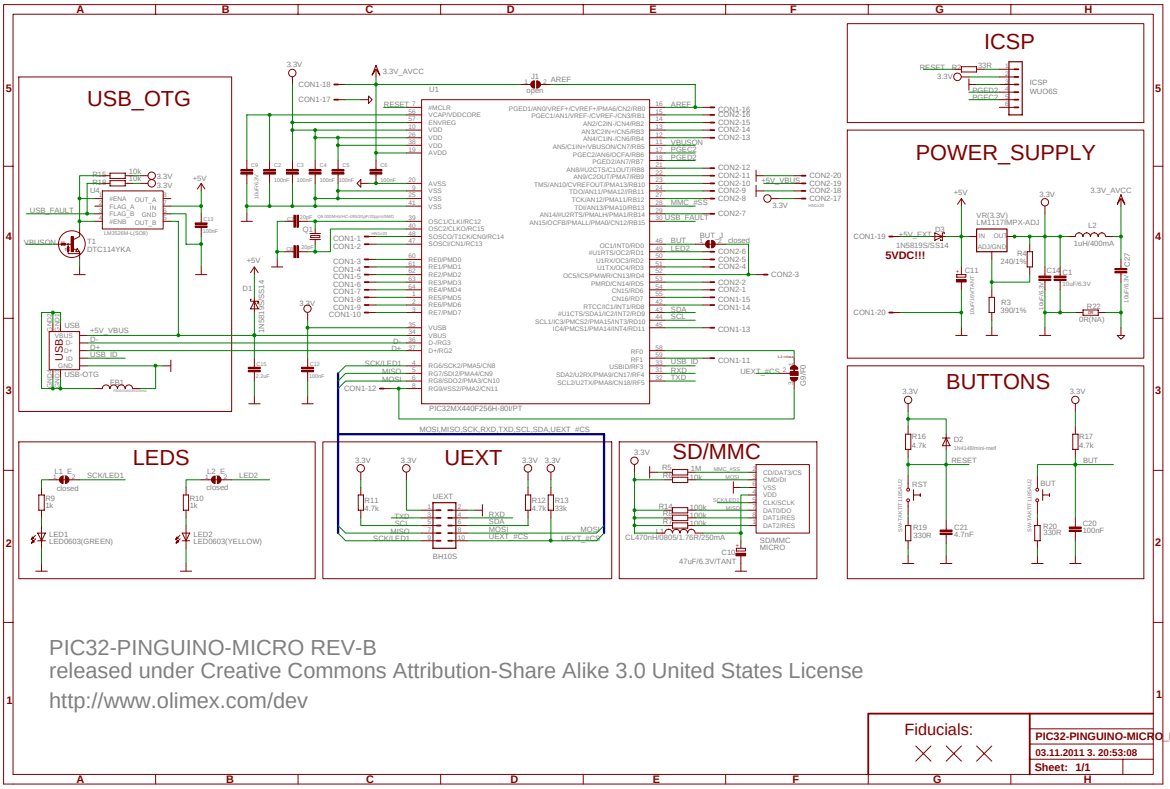

PIC32-PINGUINO-MICRO REV-B
released under Creative Commons Attribution-Share Alike 3.0 United States License
http://www.olimex.com/dev

Fiducials:

PIC32-PINGUINO-MICRO_Rev_B
03.11.2011 3. 20:53:08
Sheet: 1/1