USB Connector

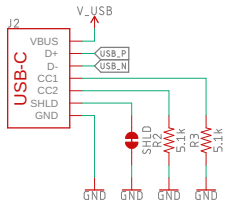

Cut SHLD jumper to disconnect shield from GND

3V3 Regulator

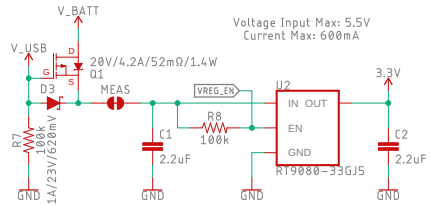

Voltage Input Max: 5.5V
Current Max: 600mA

Cut MEAS jumper to measure total board current consumption

Battery Charger

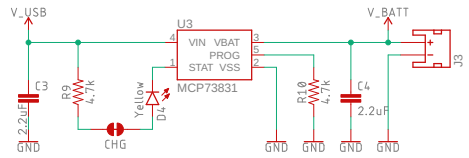

Cut CHG jumper to remove charge LED

I_CHG = 1000 / R_PROG
RPROG = 4.7k: I_CHG = 213mA

I2C Pullups

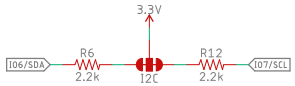

Cut I2C jumper to remove pull up resistors

Qwiic Connector

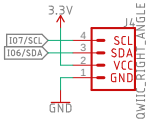

Battery Fuel Gauge

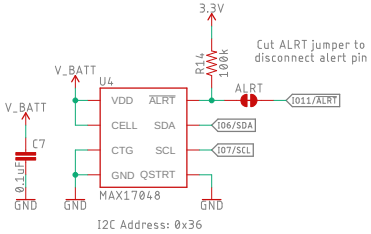

I2C Address: 0x36

Low Power Control

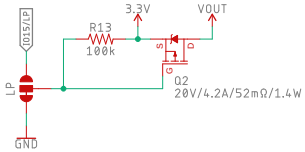

Move LP jumper to IO15 side to enable low power control

uSD Card Connector

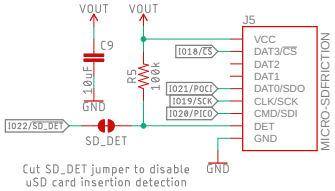

Cut SD_DET jumper to disable uSD card insertion detection

ESP32-C6

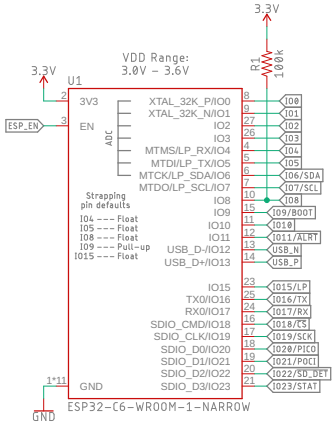

Thing Plus Pinout

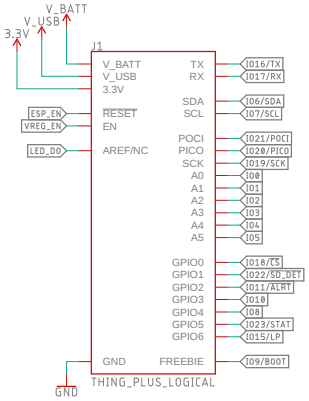

Power LED

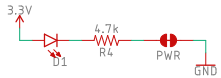

Cut PWR jumper to remove power LED

Status LED

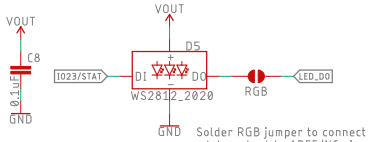

Solder RGB jumper to connect data output to AREF/NC pin

Buttons

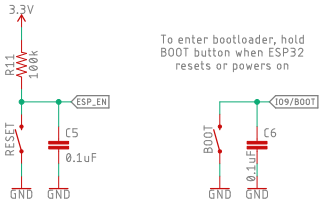

To enter bootloader, hold BOOT button when ESP32 resets or powers on

Released under the Creative Commons Attribution Share-Alike 4.0 License
https://creativecommons.org/licenses/by-sa/4.0/

TITLE: Thing_Plus_ESP32_C6

Design by: Dryw Wade

REV: v10

Date: 8/25/2023 1:38 PM

Sheet: 1/1