Zumo Shield for Arduino, v1.3

© 2020 Pololu Corporation
www.pololu.com

Schematic diagram

Primary Arduino connections

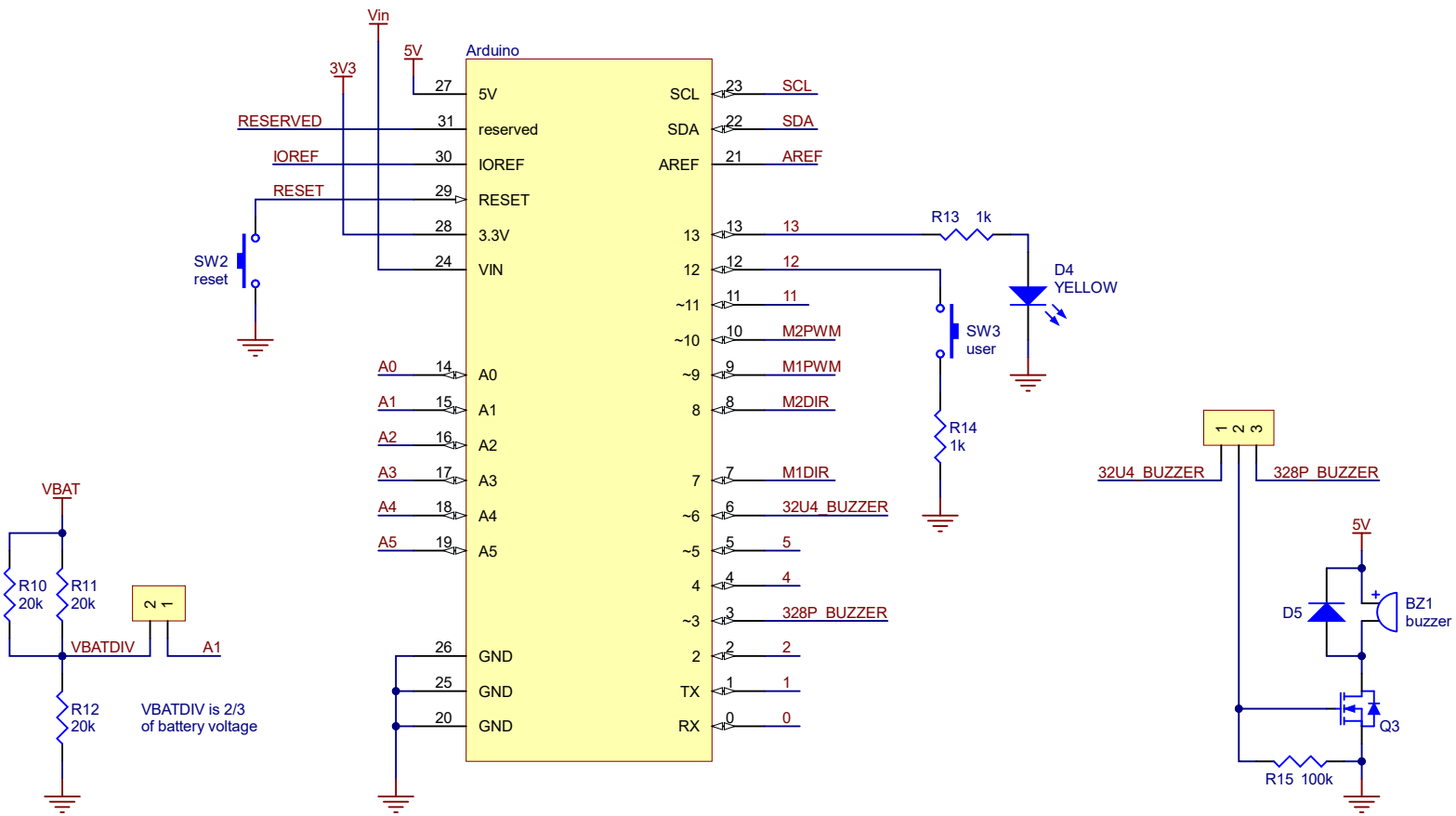

© 2020 Pololu Corporation

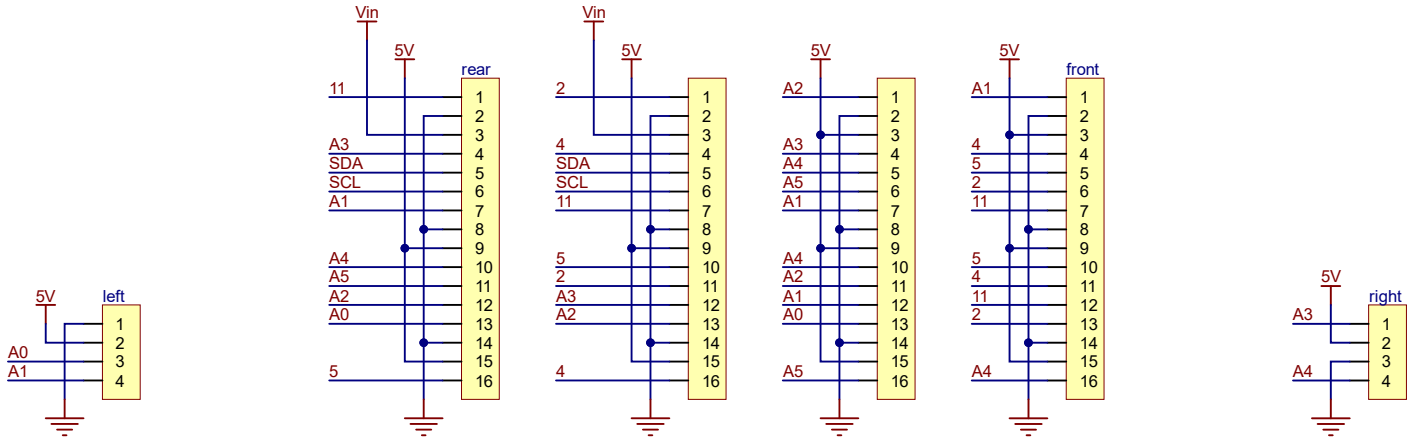

© 2020 Pololu Corporation

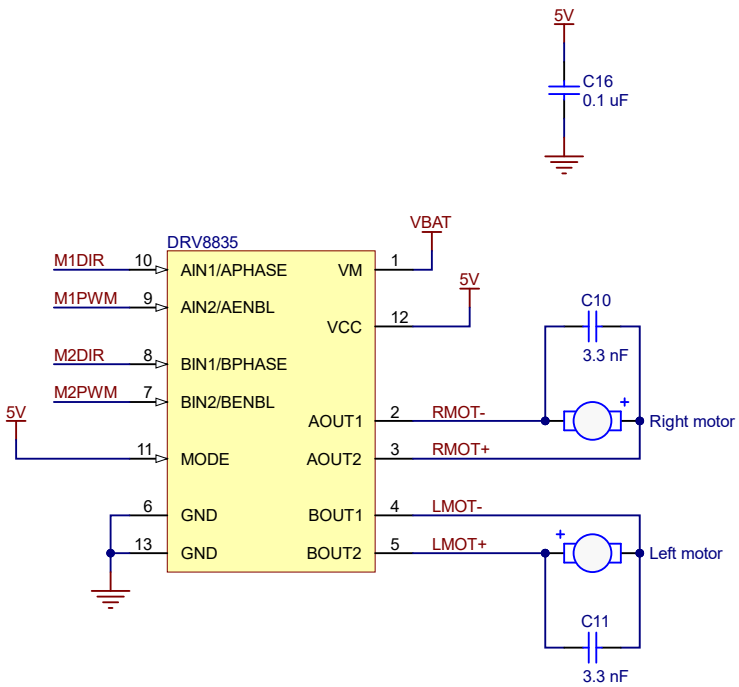

© 2020 Pololu Corporation

Inertial sensors
(3-axis accelerometer, gyro, and magnetometer)

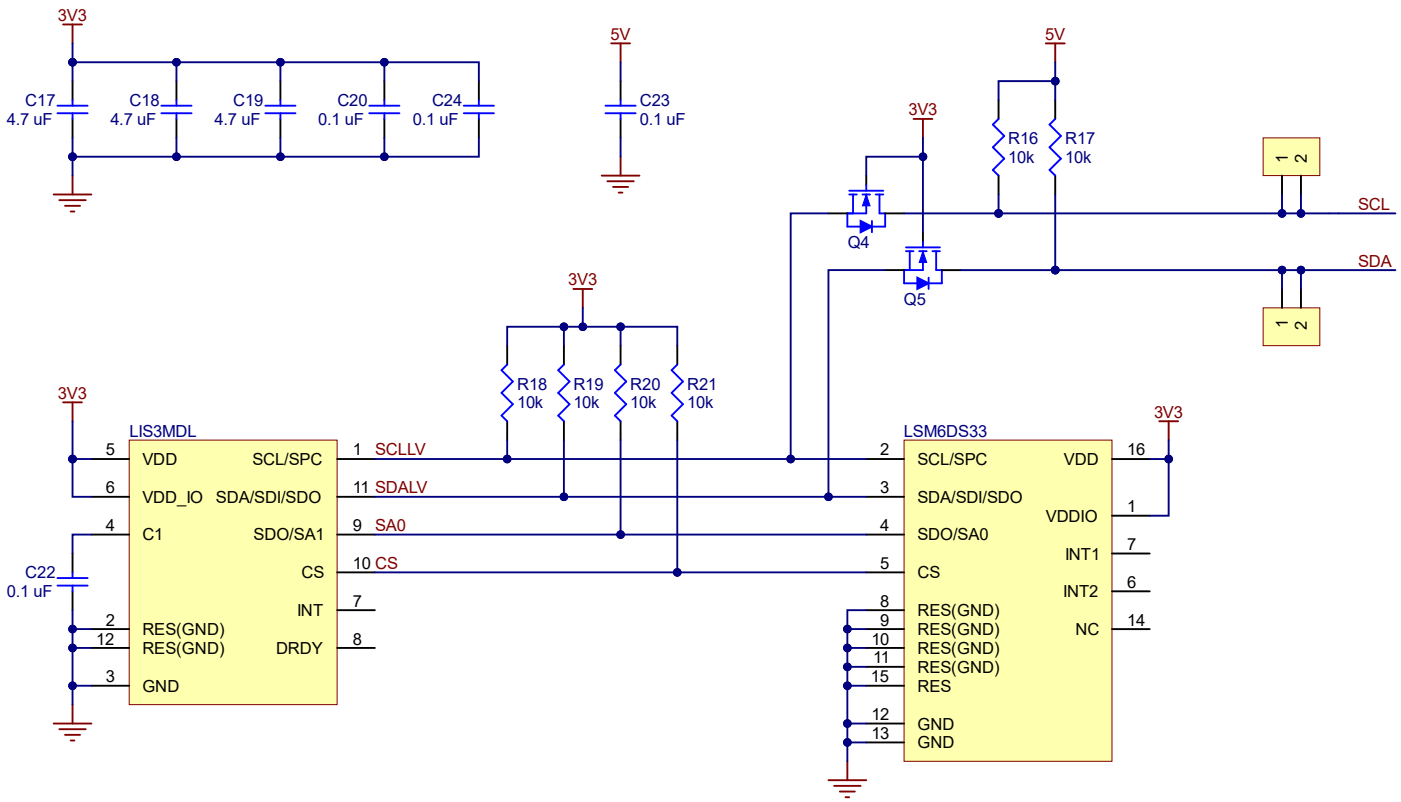
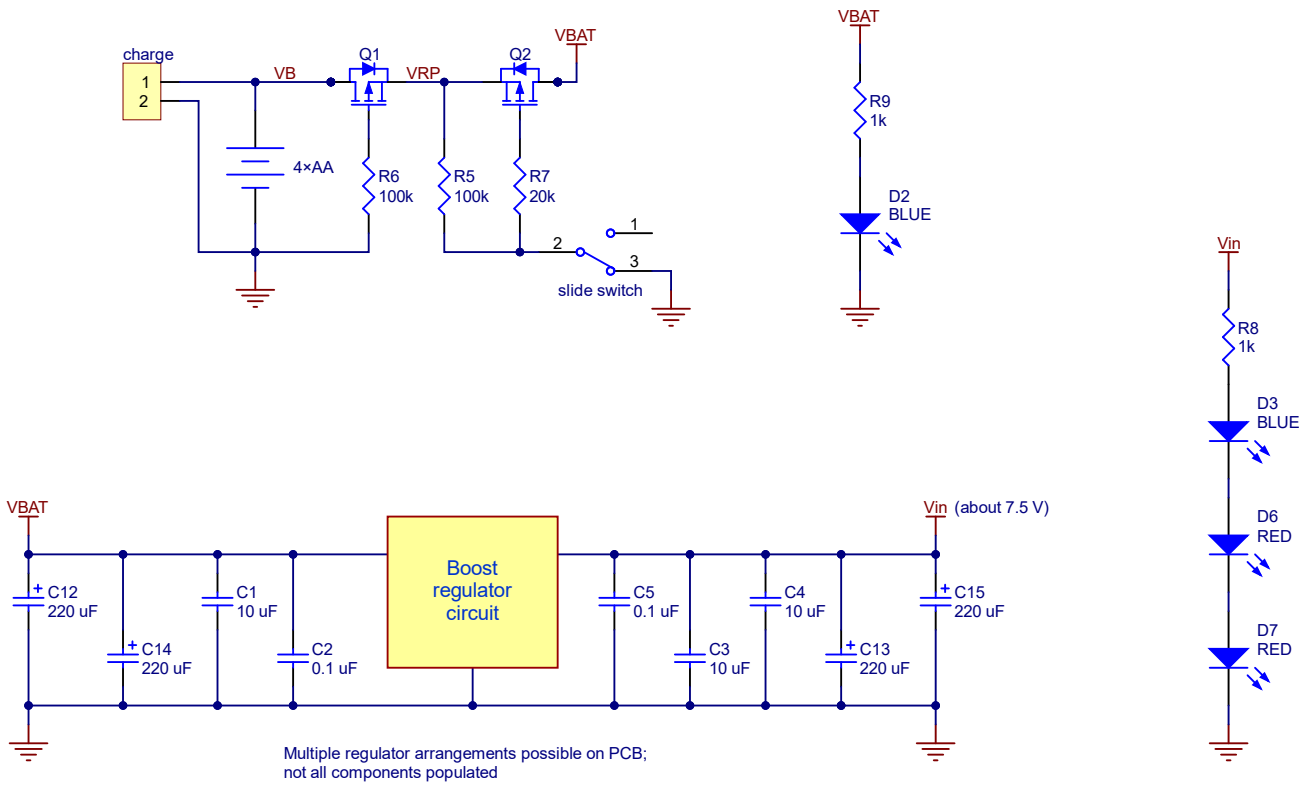
© 2020 Pololu Corporation