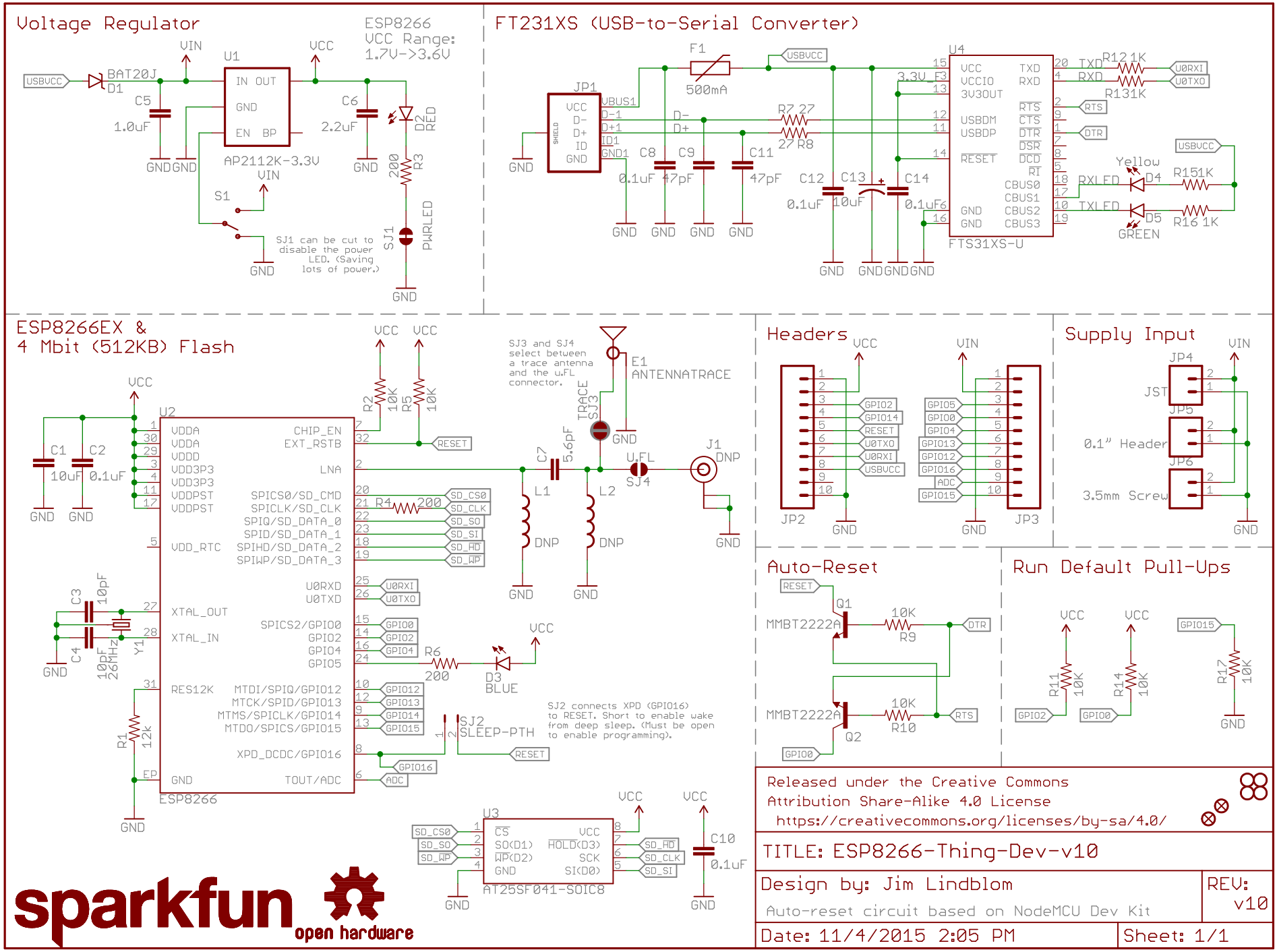
Voltage Regulator
ESP8266 VCC Range: 1.7V->3.6V
USBVCC
BAT20J D1
VIN
U1
VCC
IN OUT
GND
EN BP
AP2112K-3.3V
C5 1.0uF
C6 2.2uF
D2 RED
R3 200
PWRLED
SJ1
S1
SJ1 can be cut to disable the power LED. (Saving lots of power.)
GND
FT231XS (USB-to-Serial Converter)
JP1
VBUS1
D-1
D+1
ID1
GND1
SHIELD
F1 500mA
R7 27
R8 27
C8 0.1uF
C9 47pF
C11 47pF
C12 0.1uF
C13 10uF
C14 0.1uF
U4
VCC
VCCIO
3V3OUT
USBDM
USBDP
RESET
TXD
RXD
RTS
CTS
DTR
DSR
DCD
RI
CBUS0
CBUS1
CBUS2
CBUS3
FTS31XS-U
R12 1K
R13 1K
U0RXI
U0TXO
Yellow
D4
R15 1K
RXLED
TXLED
D5 GREEN
R16 1K
ESP8266EX &
4 Mbit (512KB) Flash
U2
VDDA
VDD3P3
VDDPST
VDD_RTC
CHIP_EN
EXT_RSTB
LNA
SPICS0/SD_CMD
SPICLK/SD_CLK
SPIQ/SD_DATA_0
SPID/SD_DATA_1
SPIHD/SD_DATA_2
SPIWP/SD_DATA_3
U0RXD
U0TXD
XTAL_OUT
XTAL_IN
SPICS2/GPIO0
GPIO2
GPIO4
GPIO5
RES12K
MTDI/SPIQ/GPIO12
MTCK/SPID/GPIO13
MTMS/SPICLK/GPIO14
MTDO/SPICS/GPIO15
XPD_DCDC/GPIO16
TOUT/ADC
ESP8266
C1 10uF
C2 0.1uF
C3 10pF
C4 10pF
Y1 26MHz
R1 12k
R2 10K
R5 10K
R4 200
R6 200
D3 BLUE
SJ2 SLEEP-PTH
SJ2 connects XPD (GPIO16) to RESET. Short to enable wake from deep sleep. (Must be open to enable programming).
SJ3 and SJ4 select between a trace antenna and the u.FL connector.
E1 ANTENNATRACE
TRACE SJ3
C7 5.6pF
U.FL SJ4
J1 DNP
L1 DNP
L2 DNP
U3
CS
SO(D1)
WP(D2)
HOLD(D3)
SCK
SI(D0)
AT25SF041-SOIC8
C10 0.1uF
Headers
JP2
JP3
Supply Input
JP4 JST
JP5 0.1" Header
JP6 3.5mm Screw
Auto-Reset
Q1 MMBT2222A
Q2 MMBT2222A
R9 10K
R10 10K
Run Default Pull-Ups
R11 10K
R14 10K
R17 10K
Released under the Creative Commons Attribution Share-Alike 4.0 License
https://creativecommons.org/licenses/by-sa/4.0/
TITLE: ESP8266-Thing-Dev-v10
Design by: Jim Lindblom
Auto-reset circuit based on NodeMCU Dev Kit
REV: v10
Date: 11/4/2015 2:05 PM
Sheet: 1/1
sparkfun
open hardware