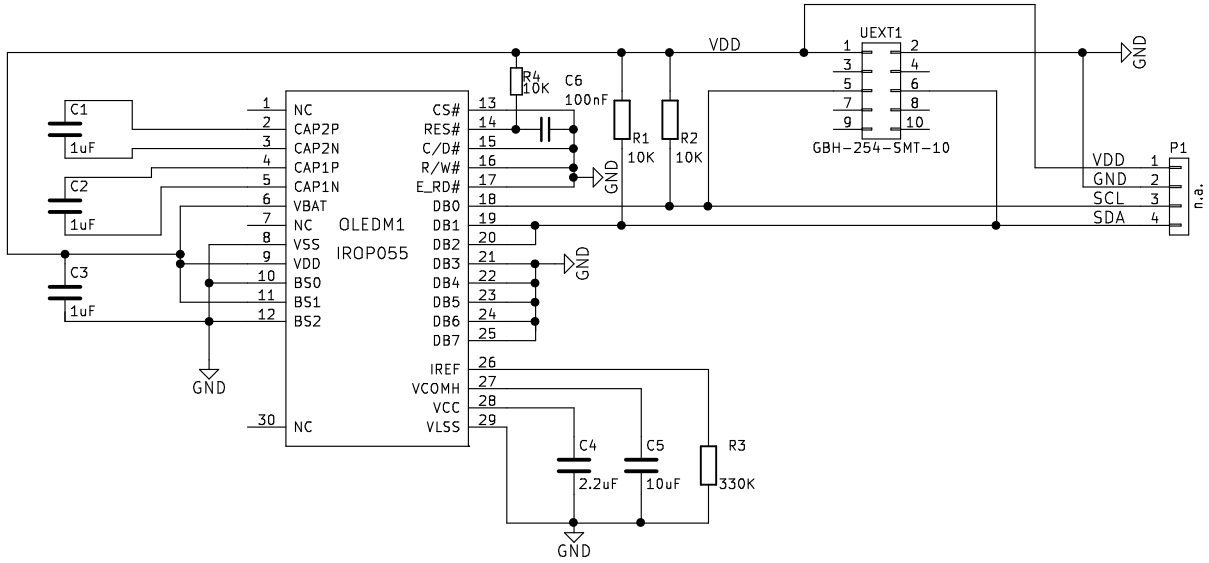


Sheet: /
File: mod-oled-128x64.sch

**Title:**

| Size: A4 | Date: | Rev: |
|---|---|---|
| KiCad E.D.A. kicad 0.201506182246+578323ubuntu14.04.1-product | | Id: 1/1 |