ver.
100

Arduino MEGA click SHIELD

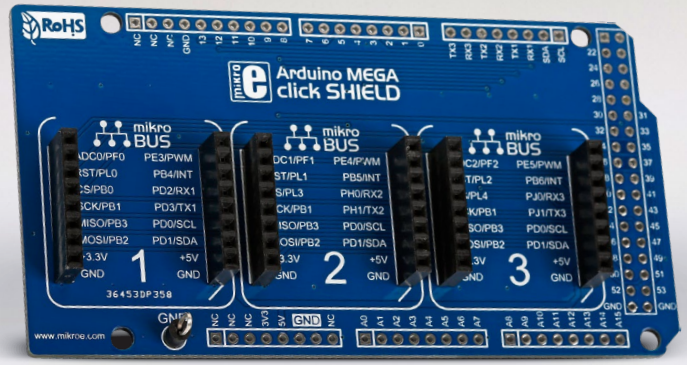

MikroElektronika
DEVELOPMENT TOOLS | COMPILERS | BOOKS

Arduino MEGA click SHIELD - schematic

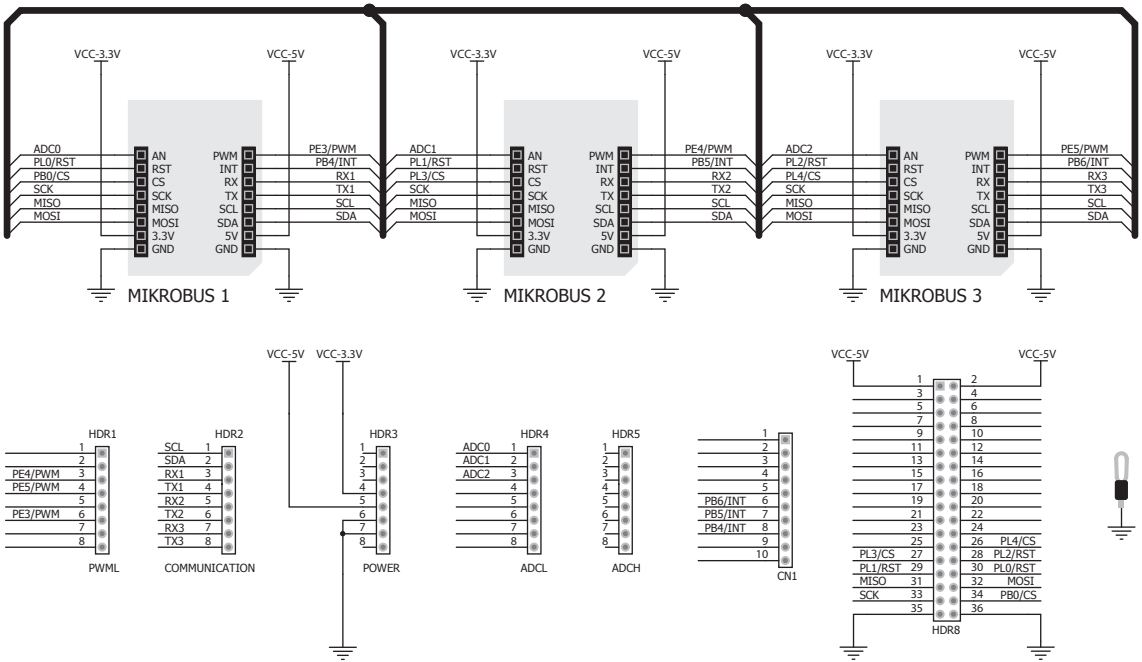

MikroElektronika
DEVELOPMENT TOOLS | COMPILERS | BOOKS

Arduino MEGA click SHIELD - dimensions

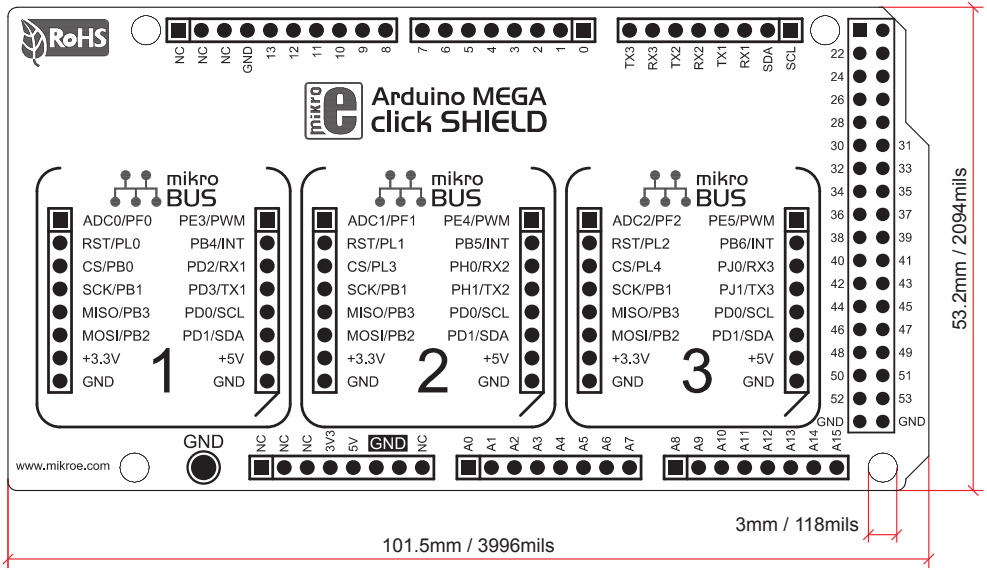

MikroElektronika
DEVELOPMENT TOOLS | COMPILERS | BOOKS