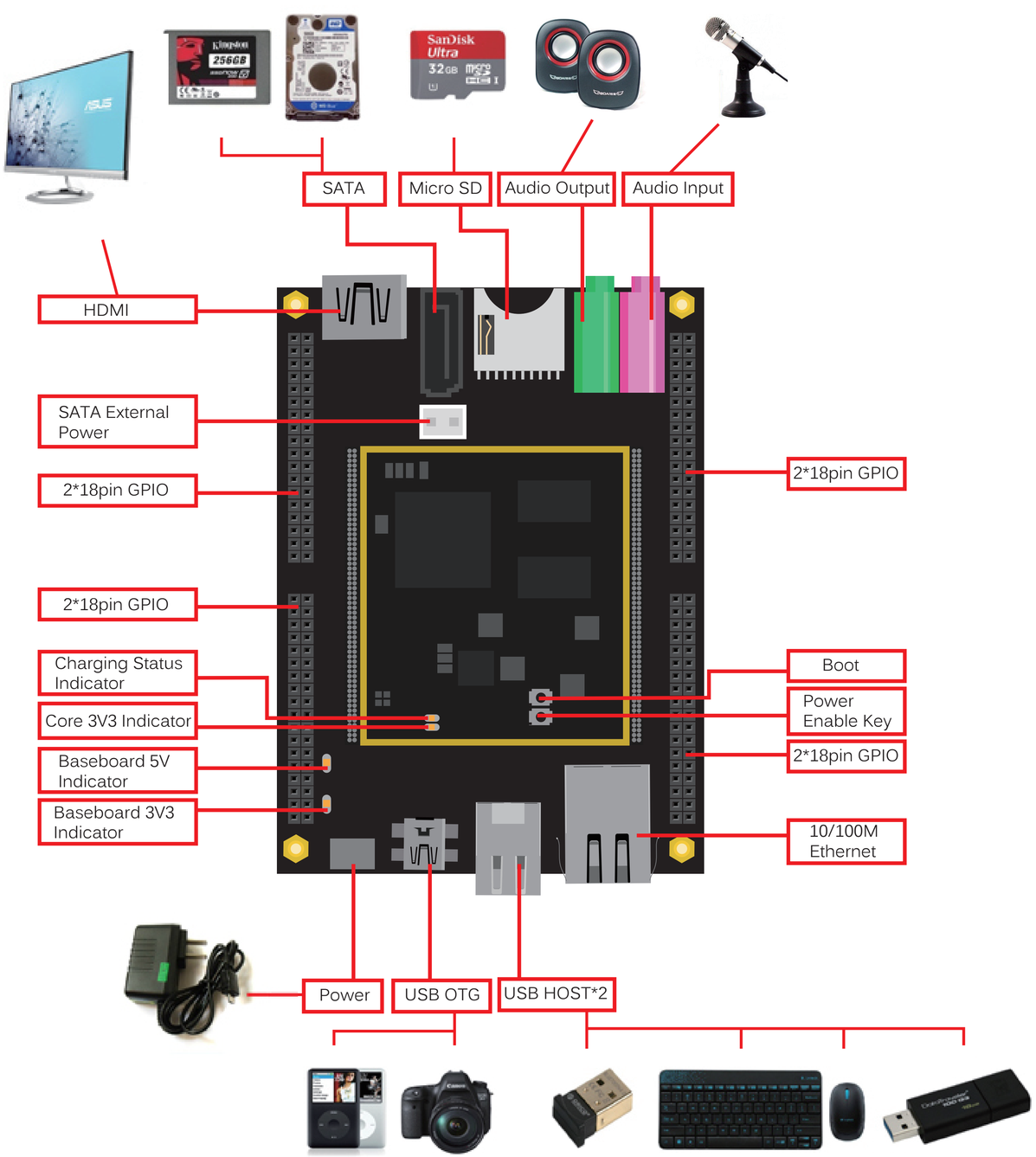

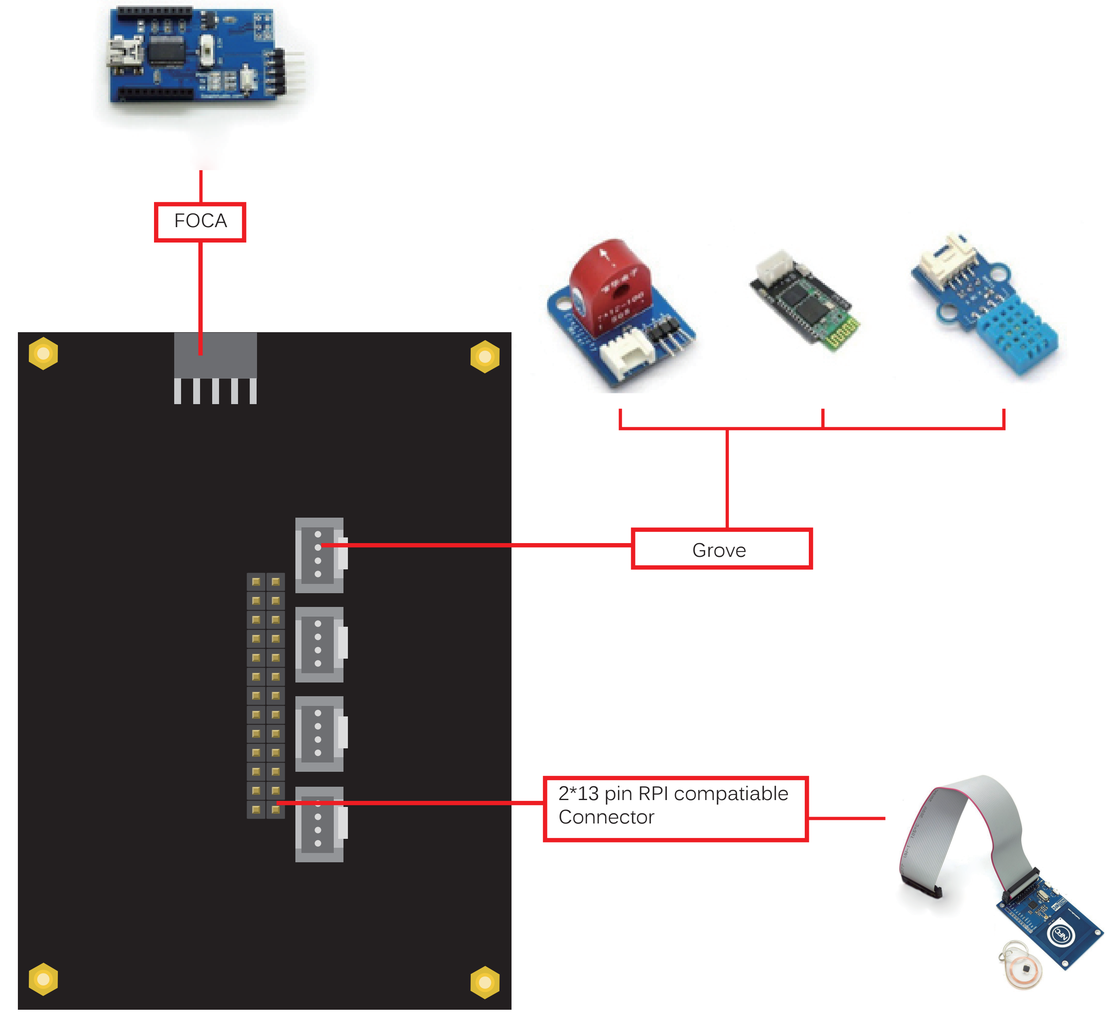

ITEAD STUDIO