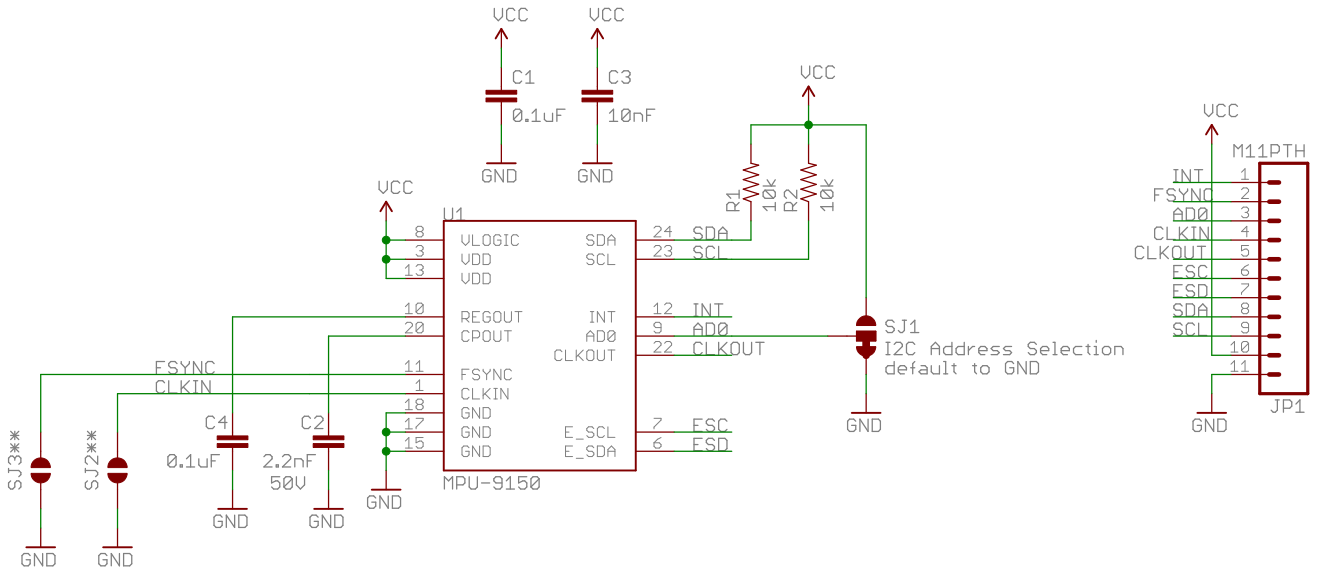

*2.375V < VCC < 3.465V

*The LSB bit of the 7 bit address is determined by the logic level on pin AD0.
Default Address = 0x68 (pin AD0 is logic low)
Alternative Address =0x69 (pin AD0 is logic high)

**Optional external reference clock input or synchronization digital input.
Connected to GND by default. Cut trace for external control

open hardware

SFE SFE

Released under the Creative Commons
Attribution Share-Alike 3.0 License A. Weiss
http://creativecommons.org/licenses/by-sa/3.0

TITLE: mpu-9150_breakout

Design by:

REV:

Date: 1/4/2013 3:01:03 PM

Sheet: 1/1