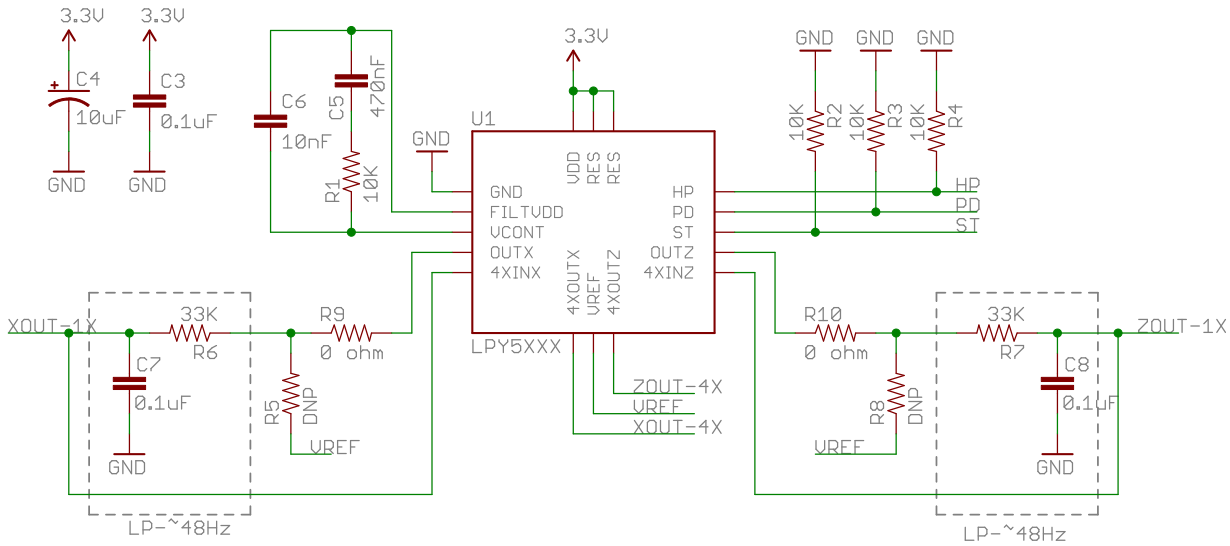

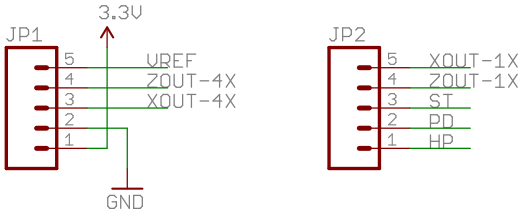

TITLE: ST-DualGyro-PY-Breakout-v11	SFE
Document Number:	REV:
Date: 8/5/2010 10:40:14 AM	Sheet: 1/1