Revsion Notes: changed to 16Mhz crystal, added 3.3V reg
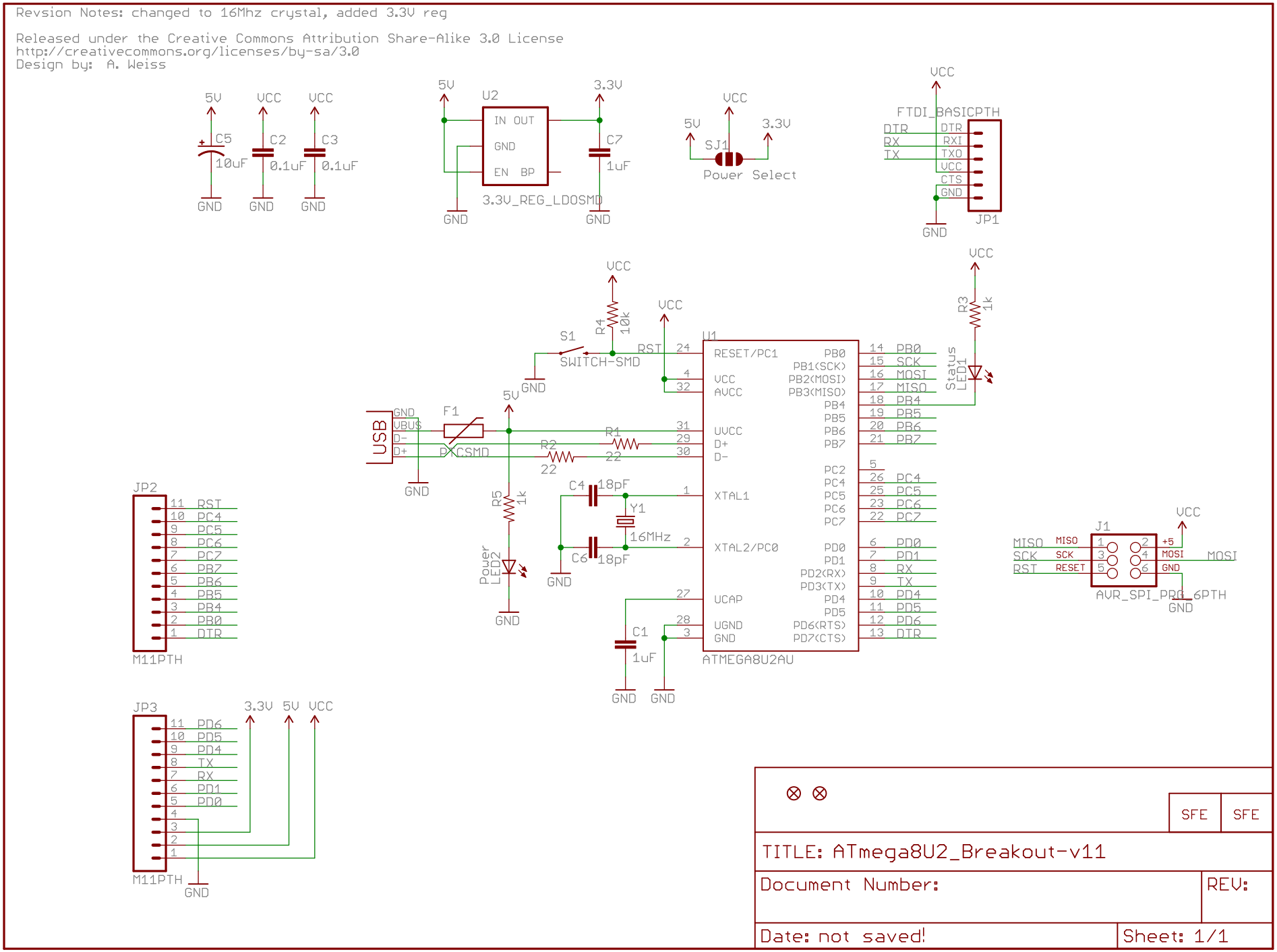
Released under the Creative Commons Attribution Share-Alike 3.0 License
http://creativecommons.org/licenses/by-sa/3.0
Design by: A. Weiss